NOTES:

1. ALL AIR PISTON INLETS ARE FITTED WITH McMASTER 4076K32 FLOW ADJUSTERS.

2. 4 AND 6 PLACE MANIFOLDS FITTED WITH CLIPPARD ET-3M-24 SOLENOID VALVES AS SHOWN

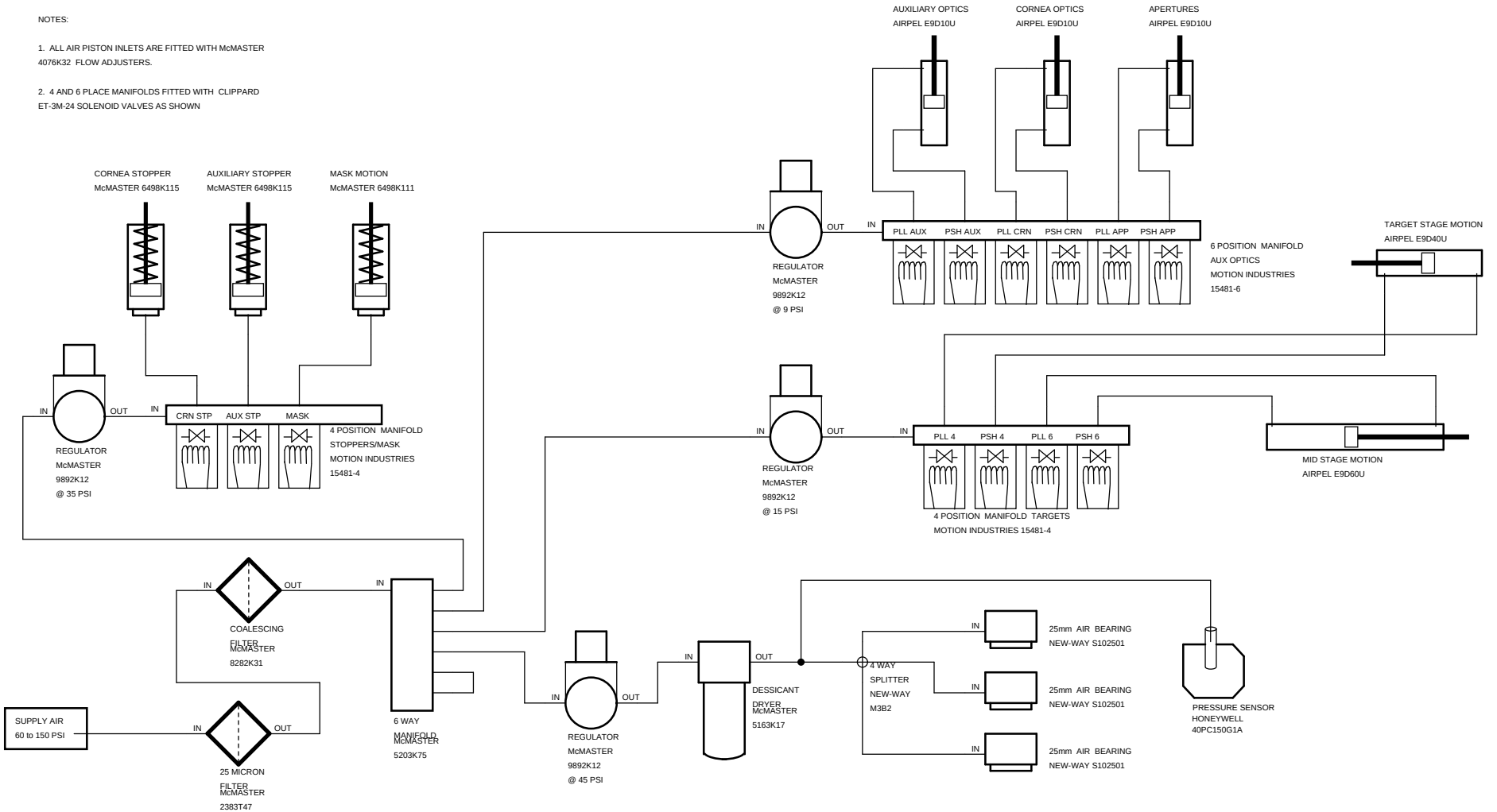

The Pilot Group 128 W. Walnut Ave Unit C Monrovia, CA 91016 (626) 599 9422	TITLE: **PNEUMATIC SYSTEM ADVANCED INSPECTION BENCH**		
NUMBER: **AINB13001**	REV: **A**	DATE: **9/29/2005**	SHEET **1** OF **1**