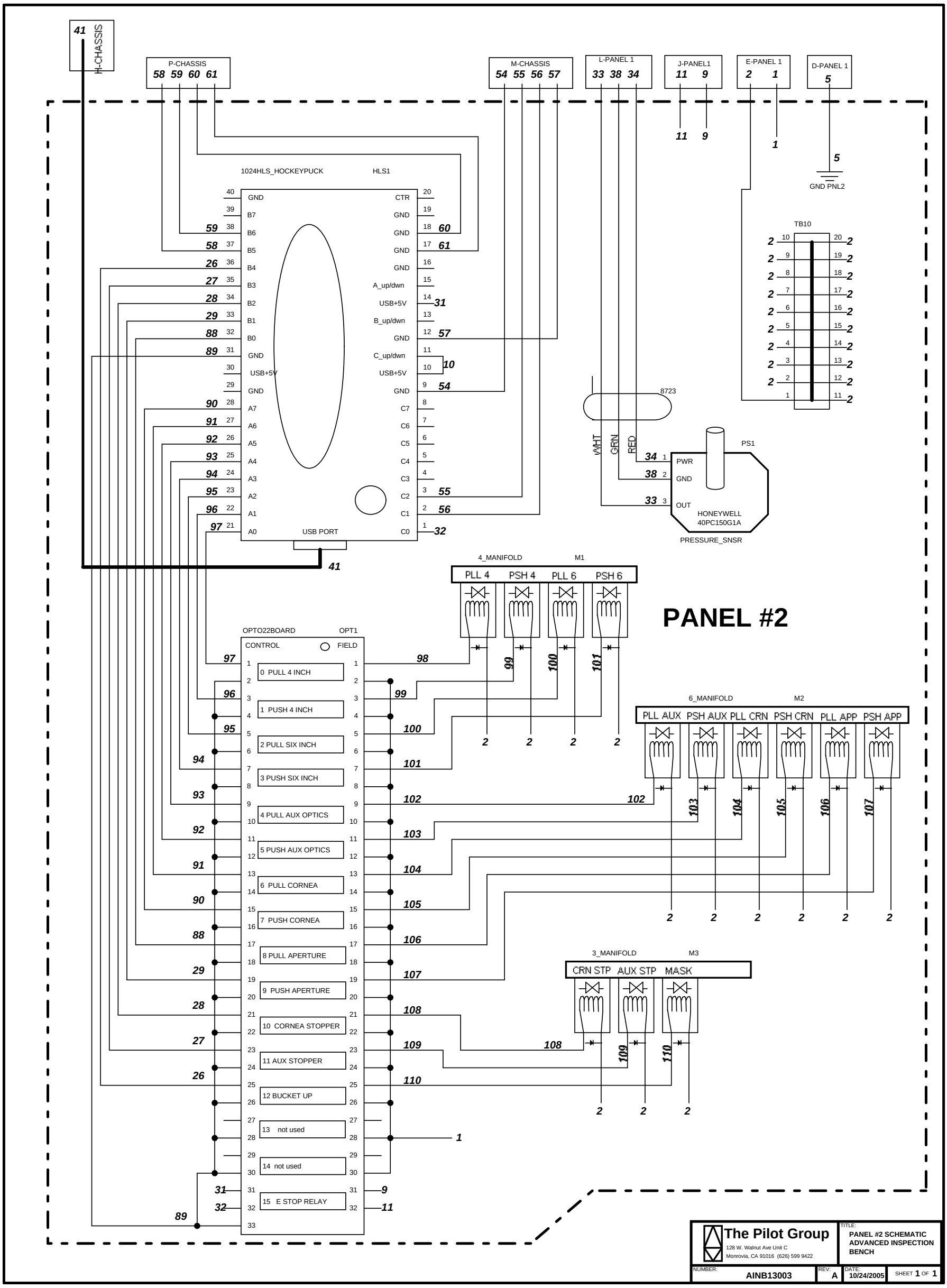

The Pilot Group
128 W. Walnut Ave Unit C
Monrovia, CA 91016 (626) 599 9422

TITLE: PANEL #2 SCHEMATIC ADVANCED INSPECTION BENCH

NUMBER:	REV:	DATE:	SHEET
AINB13003	A	10/24/2005	1 OF 1